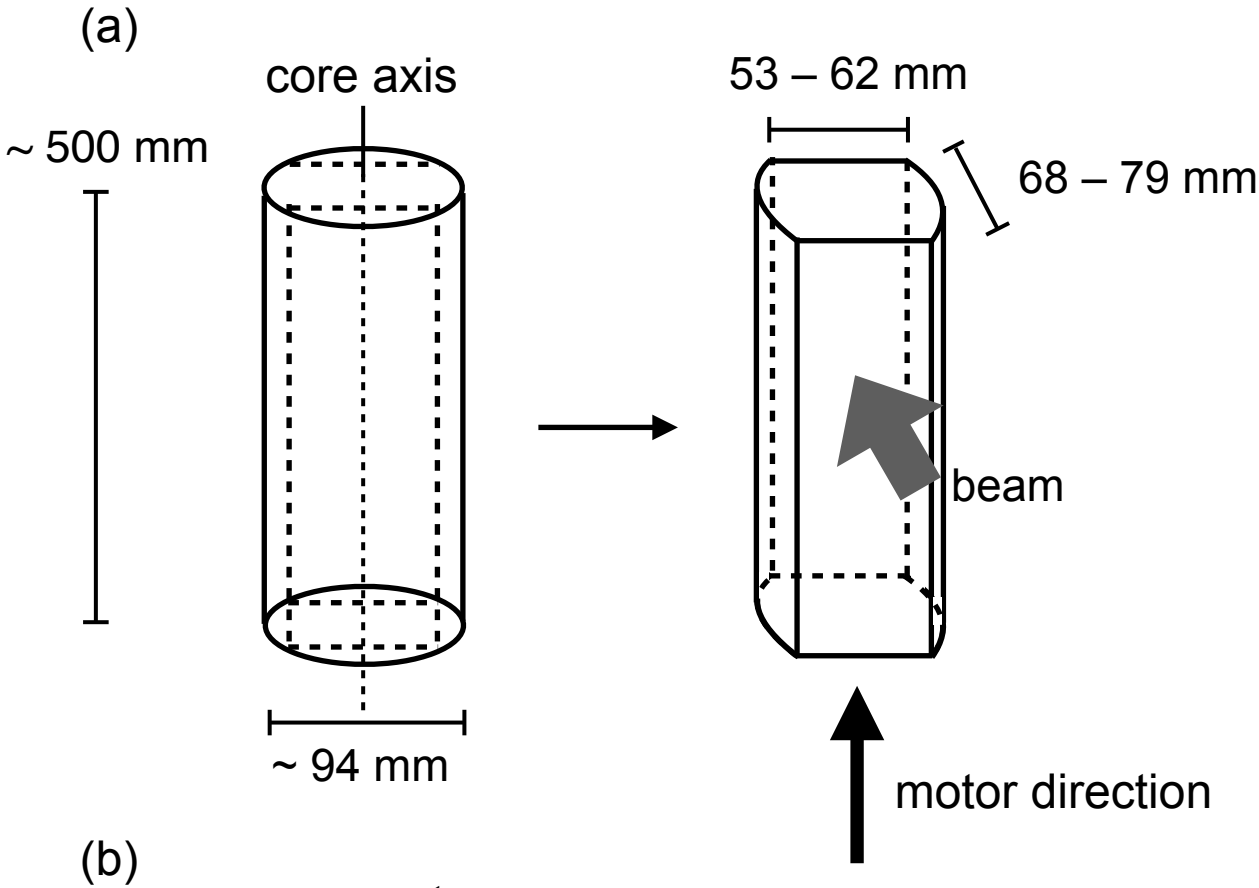
(a)
core axis
~ 500 mm
~ 94 mm
53 – 62 mm
68 – 79 mm
beam
motor direction

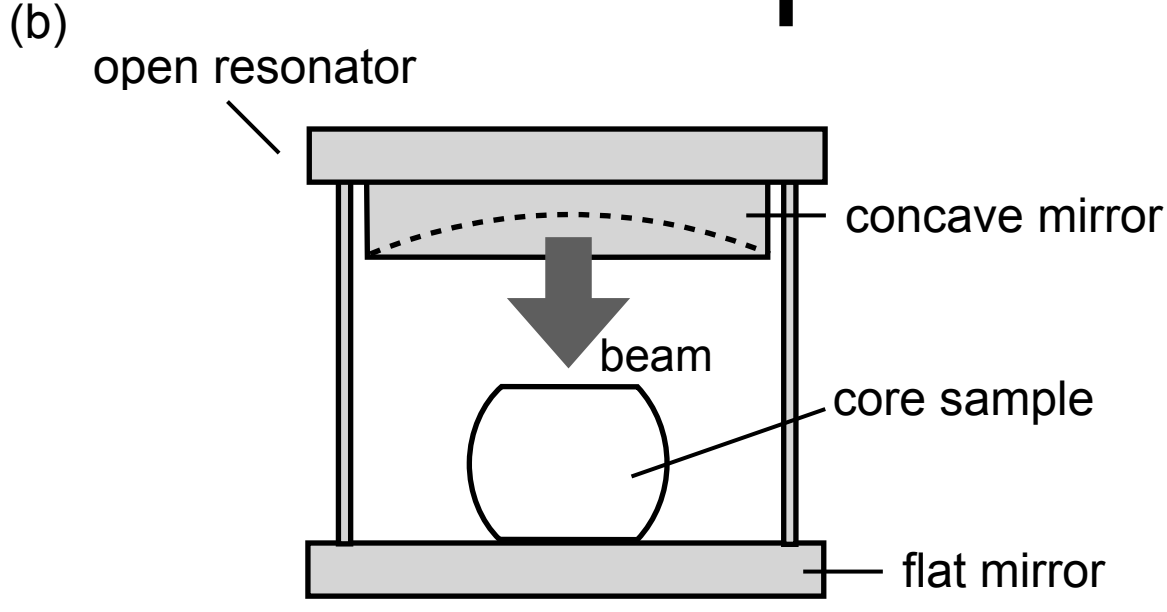
(b)
open resonator
concave mirror
beam
core sample
flat mirror